Application Note

Backhauling NGN Traffic over TDM Infrastructure

Connecting IP NodeBs, WiMAX Base Stations and IP DSLAMs to PDH and SDH/SONET Backbones

Typical Users

- Mobile and WiMAX operators
- Emerging carriers and service providers
- Transport providers

Typical Applications

- Inter-LAN connectivity over TDM
- Ethernet transport from IP DSLAMs over PDH
- WiMAX backhaul over E1/T1, E3/T3
- 3G/4G mobile backhaul over PDH radio

While the telecom industry transitions to new packet technologies, existing PDH and SDH/SONET infrastructure continues to play a significant role in linking end-point devices to central offices and NOCs (network operations centers). Without appropriate backhaul equipment that can offer high-speed access for newly-deployed IP NodeBs, WiMAX base stations and IP DSLAMs, telecom providers could face rollout delays for mobile broadband and NGN business services, putting a strain on their profitability.

RAD's RICi demarcation devices enable operators to cost effectively reduce their time-to-market for new service offerings by leveraging widely available TDM networks. As shown in Figure 1, service providers with packet cores can reach out-of-footprint customers over leased legacy lines by deploying the RICi-16 in point-to-point topology at the IP DSLAM POP (point of presence) and the central office. This allows them to transparently deliver Ethernet traffic over clear-channel E3 or T3 links and SDH/SONET backbones, with a seamless hand-off to the packet network. The RICi NTUs (network termination units) also work opposite the Egate-100 aggregation device, transporting WiMAX base station traffic to the ASN (access service network) gateway over bonded E1/T1 circuits with bundled access rates of up to 32 Mbps. Employing standard Ethernet over NG-PDH protocols, the RICi demarcation devices increase bandwidth capacity by reducing latency and optimizing line utilization and throughput.

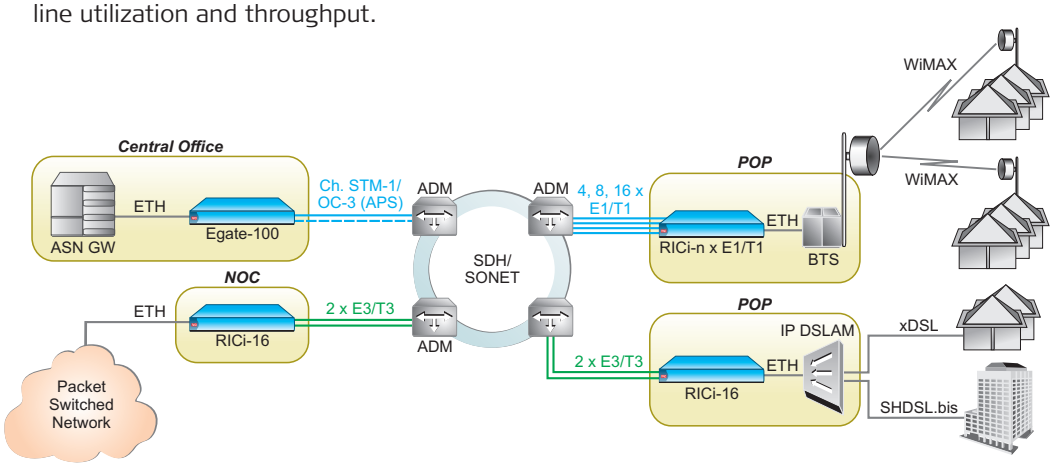

Figure 1: Deploying new broadband services where fiber is not available while simplifying operations and reducing costs

RAD data communications

Features	Benefits
Ethernet bridging over E1/T1 or E3/T3	Lower CapEx and Opex and quick activation of NGN services
Standard encapsulation and bonding over PDH (GFP, VCAT and LCAS)	Bandwidth-on-demand flexibility with dynamic allocation for higher network availability; third-party interoperability
Granular provisioning with advanced traffic management and per-VLAN rate limitation	Efficient use of network resources; customized service offering with SLA assurance
Link protection and fault propagation	Carrier-class service resiliency
Complete Ethernet OAM suite with performance monitoring, extended statistics and reporting	End-to-end visibility and service control over diverse maintenance domains
MEF-9 and MEF-14 certified for EPL and EVPL services	Improved service reliability with standardized attributes
Member of the EtherAccess® product portfolio	Consistent user experience over any access

EtherAccess

RICi-16
Ethernet over bonded PDH NTU

Egate-100
Gigabit Ethernet over TDM aggregation gateway

CARRIER ETHERNET MEF Certified Compliant

Figure 2 illustrates how RAD's RICi demarcation devices transport HSDPA cellular Ethernet traffic from an IP NodeB to the RNC (radio network controller) over TDM radio. As most of today's microwave backhaul connections remain PDH-based, the RICis' multi-generation support provides mobile operators and transport providers with a smooth migration path to IP RANs (radio access networks). These devices can maximize investments in existing infrastructure while guaranteeing QoS for new services.

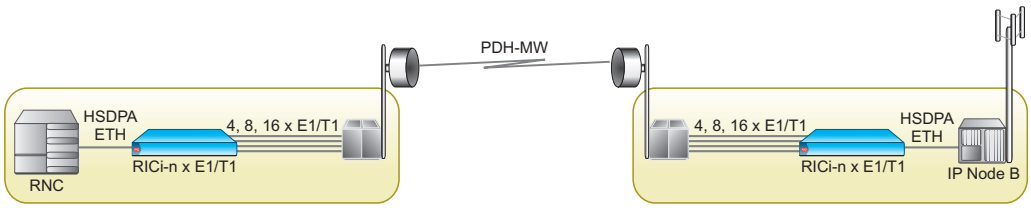

Figure 2: Next-generation mobile connectivity over PDH microwave links

Providing **REAL** (Reliable, Economical, Accountable, and Limitless) Carrier Ethernet access, the RICi and Egate's value proposition extends far beyond simple Ethernet to TDM conversion. Their enhanced capabilities include bandwidth management and differentiated prioritization, as well as comprehensive Ethernet OAM functionalities for proactive SLA (service level agreement) monitoring and easy fault localization – right off the base station or IP DSLAM.

Corporate Headquarters
RAD Data Communications Ltd.
24 Raoul Wallenberg Street
Tel Aviv 69719, Israel
Tel: 972-3-6458181
Fax: 972-3-6498250
email: market@rad.com

US Headquarters
RAD Data Communications Inc.
900 Corporate Drive
Mahwah, NJ 07430, USA
Tel: (201) 529-1100
Toll free: (800) 444-7234
Fax: (201) 529-5777
email: market@radusa.com

www.rad.com

RAD data communications

The RAD name, logo and EtherAccess are registered trademarks of RAD Data Communications Ltd.
All other trademarks are the property of their respective holders. © 2008 RAD Data Communications. All rights reserved.